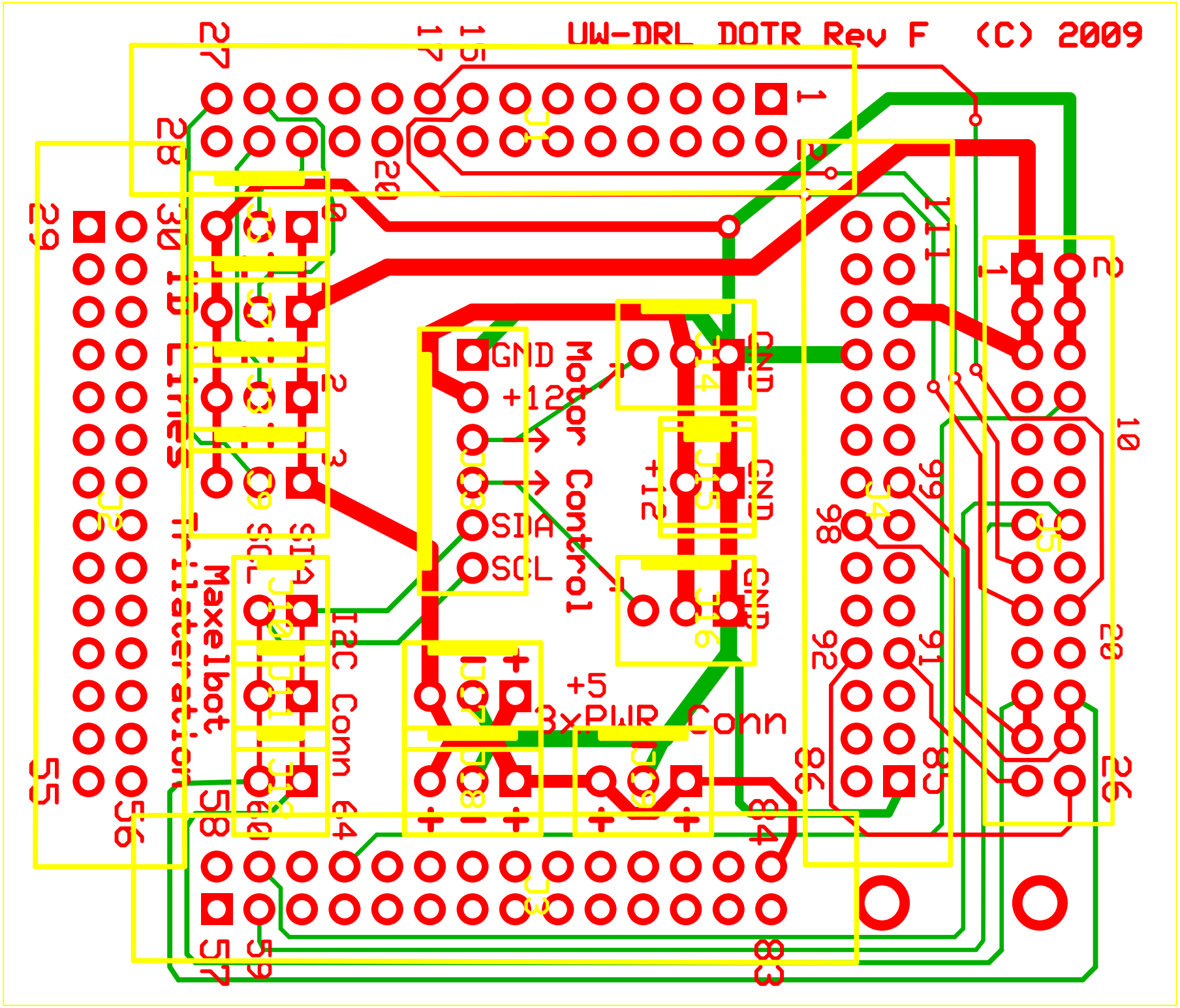

MiniDragonDOTRBRD_12Vmod_RevF_JCH.pcb (Silkscreen, Top layer, Bottom layer)

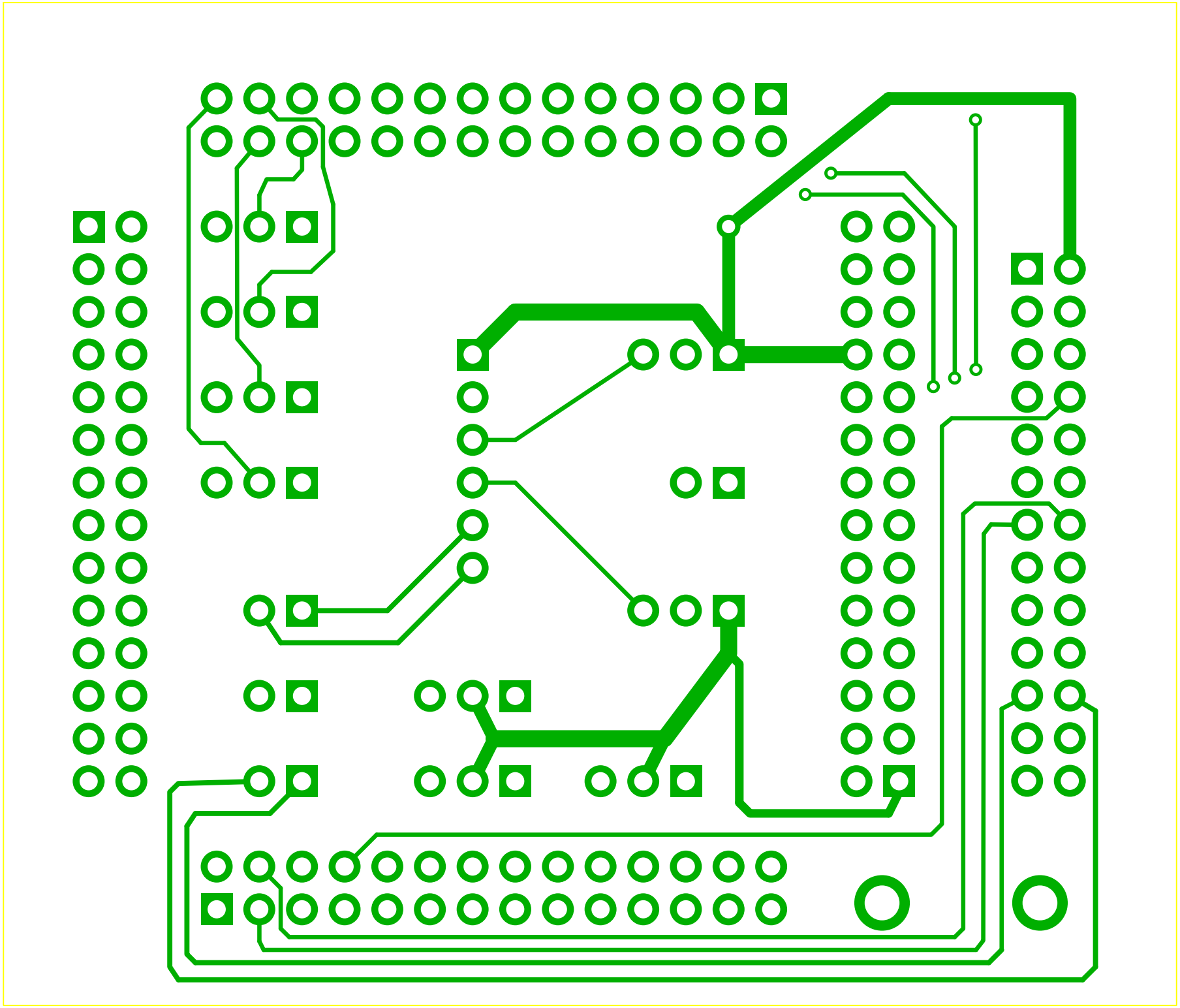

MiniDragonDOTRBRD_12Vmod_RevF_JCH.pcb (Bottom layer)

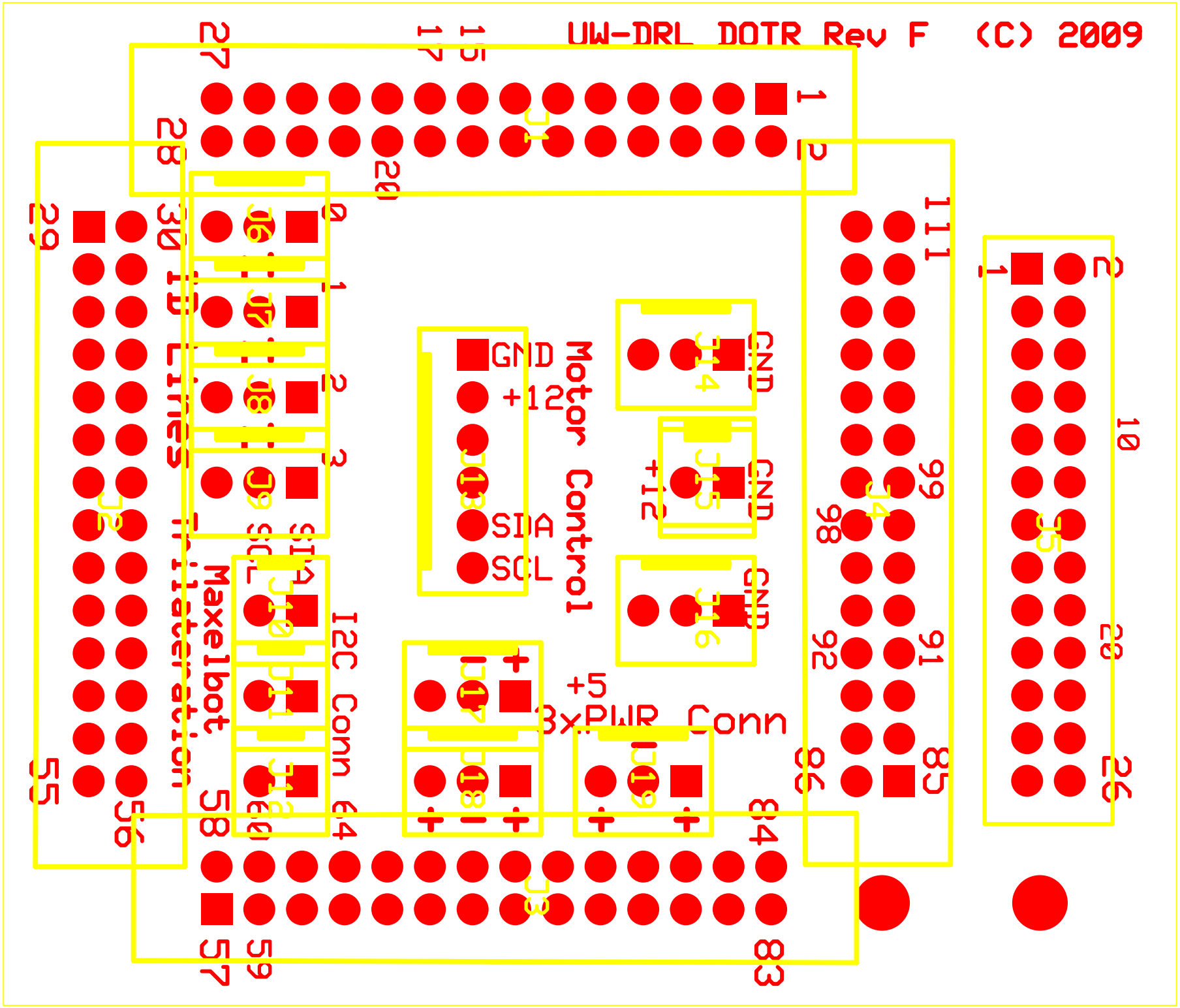
UW-DRL DOTR Rev F (C) 2009
Motor Control
GND
+12
SDA
SCL
GND
J14
GND
J15
+12
GND
J16
I2C Conn 64
SDA
SCL
Maxelbot
Initialization
Lines
3xPWR Conn
+5
C1
C2
C3
C4
C5
C6
C7
C8
C9
C10
C11
C12
C13
C14
C15
C16
C17
C18
C19
C20
C21
C22
C23
C24
C25
C26
C27
C28
C29
C30
C31
C32
C33
C34
C35
C36
C37
C38
C39
C40

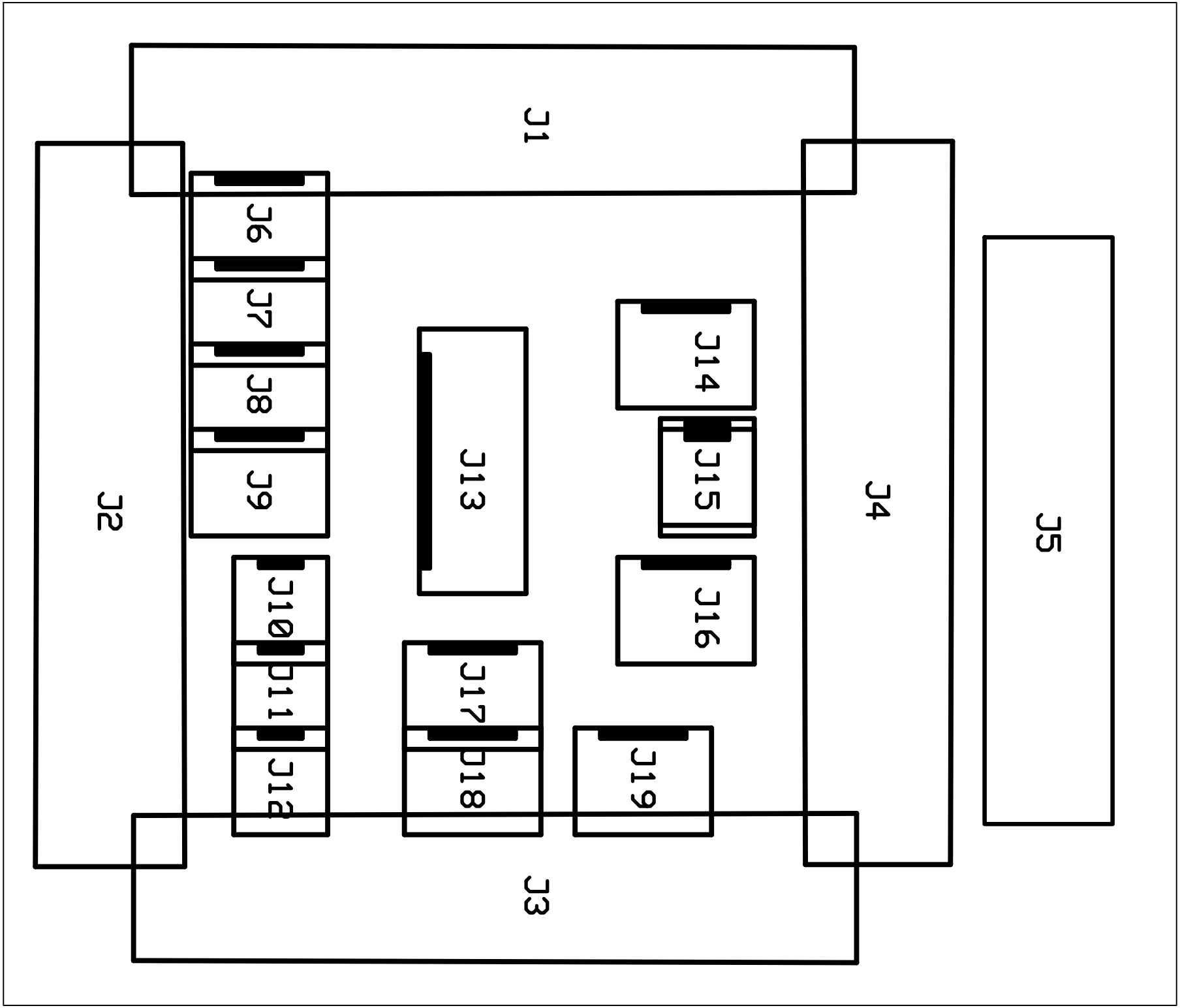

MiniDragonDOTRBRD_12Vmod_RevF_JCH.pcb (Silkscreen)

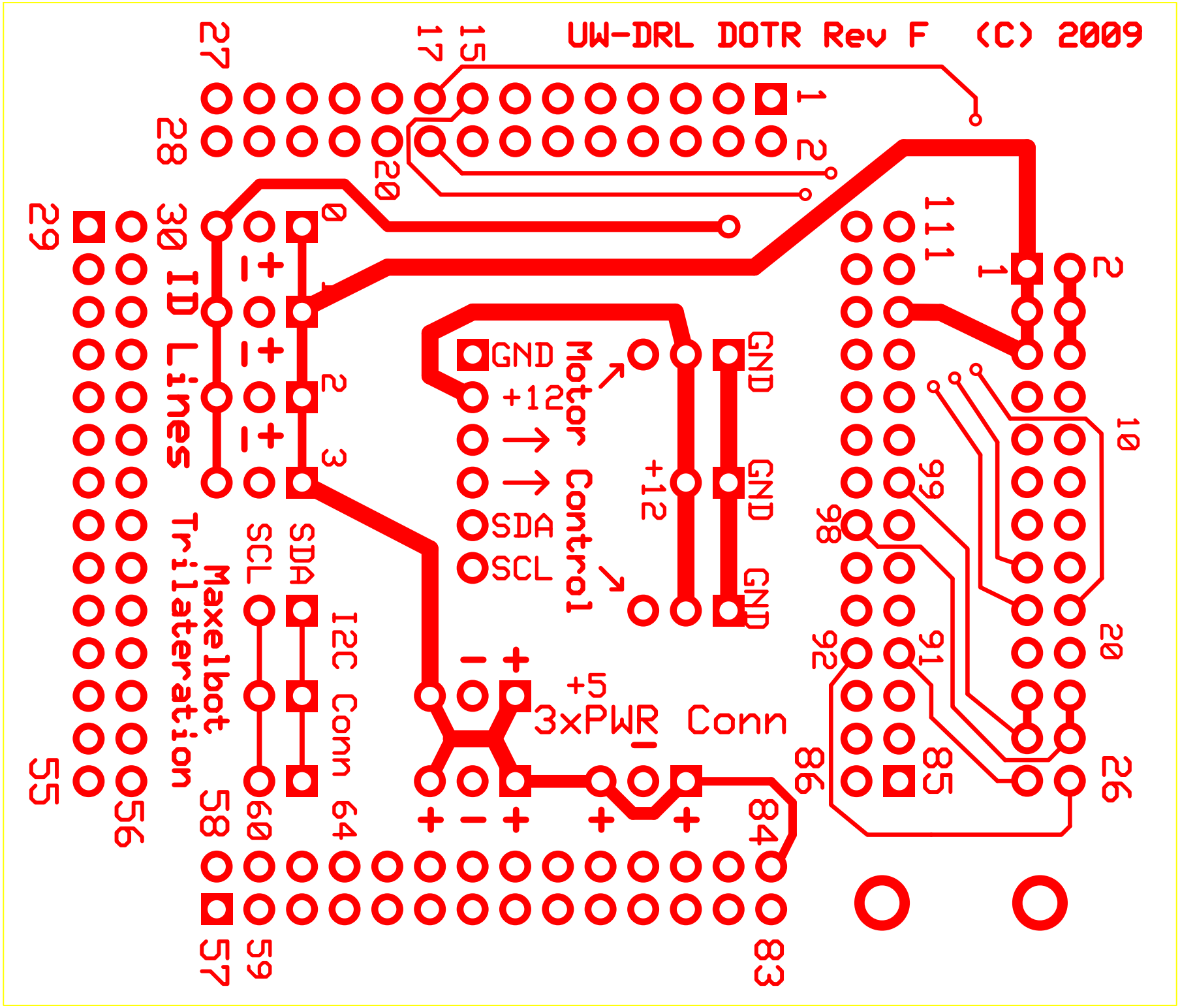

MiniDragonDOTRBRD_12Vmod_RevF_JCH.pcb (Top layer)